Article published online: 2021-09-24

Wind Noise Management in Hearing Aids

Petri Korhonen, M.Sc.[1]

ABSTRACT

Many hearing aid users are negatively impacted by wind noise when spending time outdoors. Turbulent airflow around hearing aid microphones caused by the obstruction of wind can result in noise that is not only perceived as annoying but may also mask desirable sounds in the listening environment, such as speech. To mitigate the adverse effects of wind noise, hearing aid developers have introduced several technological solutions to reduce the amount of wind noise at the hearing aid output. Some solutions are based on mechanical modifications; more recently, sophisticated signal processing algorithms have also been introduced. By offering solutions to the wind noise problem, these signal processing algorithms can promote more optimal use of hearing aids during outdoor activities. This article reviews how wind noise is generated in hearing aids, outlines the technological challenges in wind noise management, and summarizes the technological solutions that have been proposed and/or implemented in modern hearing aids.

KEYWORDS: hearing aids, noise reduction, wind noise

Wind noise is a common phenomenon encountered by most hearing aid users, particularly those who have active lifestyles and enjoy time outdoors. When wind moves past a hearing aid microphone, the airflow is obstructed and redirected. These obstructions result in local turbulences that cause air pressure fluctuations at the microphone diaphragm, which users perceive as wind noise.

Wind noise can disrupt the optimal use of hearing aids and limit participation in outdoor activities by degrading speech intelligibility and creating listening discomfort. Indeed, approximately 42% of hearing aid users report dissatisfaction with the performance of their hearing aids in windy situations.[1] Considering the increased use of hearing aids by adults at younger ages,[2] who tend to lead more active lives, finding

[1]Office of Research in Clinical Amplification (ORCA-US), WS Audiology, Lisle, Illinois.

Address for correspondence: Petri Korhonen, M.Sc., Office of Research in Clinical Amplification (ORCA-US), WS Audiology, 2300 Cabot Drive, Suite 415, Lisle, IL 60532 (e-mail: petri.korhonen@wsa.com).

Hearing Aid Technology to Improve Speech Intelligibility in Noise; Guest Editor, Joshua M. Alexander, Ph.D.

Semin Hear 2021;42:248–259.

Thieme Medical Publishers, Inc., 333 Seventh Avenue, 18th Floor, New York, NY 10001, USA
DOI: https://doi.org/10.1055/s-0041-1735133.
ISSN 0734-0451.

effective solutions to counteract wind noise becomes pertinent to ensuring successful hearing aid adoption and rehabilitation.

WHAT IS WIND NOISE?

In this article, "wind noise" refers specifically to the random fluctuations of air pressure at the hearing aid microphones that result in audible artifacts at the hearing aid output. This differs from sounds in the listening environment that are directly (or indirectly) created by the air's movement. When flowing air encounters objects in the listening environment (e.g., trees, car windows, and ocean waves) other than the hearing aids themselves, the obstruction can result in waves of acoustic energy. As such wind-generated sounds are part of the natural environmental acoustics (i.e., not artifacts caused by airflow at the hearing aid microphone), they are not considered "wind noise" in the current context. Managing the annoyance caused by undesirable sounds in the listening environment uses different approaches/strategies than those discussed in the current article, including digital noise reduction algorithms and directional microphones (see the articles by Derleth et al and by Andersen et al and in this issue for more details on these approaches).

The experience of wind is not solely a product of air movement due to weather or other means, such as fans, but may also be influenced by the physical movement of the hearing aid user. The total observed wind, called "apparent wind," is the vector sum of the true wind and the headwind experienced in still air due to the physical movement of the hearing aid user. For example, a hearing aid user walking at 1 m/s against a 3 m/s wind would result in a 4 m/s observed apparent wind. On the other hand, an observer jogging at 3 m/s to the direction of 3 m/s wind would not experience any air movement. Consequently, hearing aid users in motion could experience wind noise even in the absence of environmental wind, such as when exercising indoors.

MECHANISM OF WIND NOISE CREATION

Physical objects in the environment can force airflow to redirect. When air velocity is low, its flow around an object tends to be laminar, which means that the air moves in parallel layers, where all particles within a layer have the same velocity. When air velocity is high, the airflow may not be able to go around the object in a laminar flow. When this happens, the airflow generates eddies (swirling of air and reverse current) at places where there is a large degree of mixing of the air particles between the layers, resulting in large spatial pressure differentials (Fig. 1). Under these turbulent conditions, air near the microphone can alternate between high- and low-pressure states, which exert push and pull forces on the microphone diaphragm, respectively. It is these forces acting on the hearing aid microphone that create the hearing aid artifacts commonly referred to as "wind noise." Wind noise can mask more important acoustic signals in the listening environment that would be otherwise transduced by the hearing aid microphone. Moreover, wind noise can move the microphone diaphragm to such an extent that it overloads the microphone preamplifier resulting in audible distortion. Even a relatively moderate breeze (6 m/s; 13.4 mph) can lead to wind noise levels that exceed the long-term average speech spectrum across most frequencies, with faster winds (12 m/sec; 26.8 mph) completely saturating the microphone output.[3]

CHARACTERISTICS OF WIND NOISE

Due to its force on the hearing aid microphone, wind noise is typically loud, reaching levels as high as 116 dB SPL (sound pressure level) for some behind-the-ear (BTE) hearing aids at 12 m/sec wind speed.[3] The acoustic characteristics of wind noise depend on the wind speed and the direction relative to the hearing aid. In theory, the wind noise level increases in proportion to the square of wind speed.[4,5] This means that when the wind speed doubles, the wind noise increases by a factor of four or 12 dB. In the real world, the increase in the noise level as wind speed increases can be even greater.[6] The direction of the wind relative to the hearing aid user also influences the wind noise level, with louder wind noise levels typically observed when the user faces the direction of the wind than when wind originates from the side.[7,8]

The spectra of wind noise vary widely under different situations. Wind noise is typically characterized by signal energy concentrated at

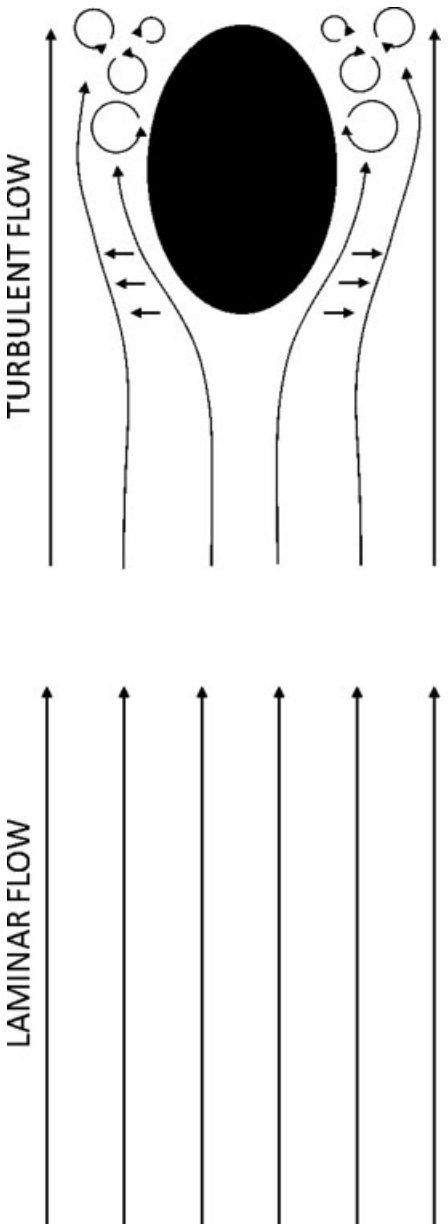

Figure 1 In laminar flow (left) different air layers move smoothly past the adjacent layers with little or no mixing. An object in the airflow path (right) can cause velocity differences between layers, resulting in turbulence where there are irregular changes in pressure and flow velocity between layers.

low frequencies. It has a relatively flat spectrum below 300 Hz and a spectrum above 300 Hz that slopes at a rate of 26 dB per octave.[7,9,10] The shape of the spectrum is influenced by the wind speed, with lower wind speeds associated with noise energy predominantly in the lower frequencies and higher wind speeds associated with a greater spread of noise energy to the higher frequencies.[11–13] A special characteristic of the turbulences created by wind is that they are unique to each measurement point in space; so, the correlation between two points rapidly decreases with the distance between them.[14,15] Because the two microphones of a dual-microphone hearing aid are spatially separated, air turbulences created by the obstruction of wind have independent fluctuations at the two microphones. Hence, the wind noise signals at each microphone are uncorrelated. Knowledge of wind noise characteristics (spectra, level, and the correlation at the two microphones) has allowed hearing aid developers to create signal processing solutions that attempt to mitigate the annoyance caused by wind noise.

SOLUTIONS TO ADDRESS WIND NOISE IN HEARING AIDS

Two main approaches have been explored to address the wind noise problem in hearing aids: mechanical modifications, including physical modifications or redesign of the form factor, and signal processing techniques.

Mechanical Solutions

Turbulent air fluctuations that cause wind noise can be reduced by laminating, redirecting, or diffusing the airflow around the hearing aid microphone. Placing a cover or a hood over the microphone laminates the wind flow by providing a smooth surface for the air to flow along, leading to fewer eddies.[5] The cover also shields the microphone diaphragm from the direct airflow. A microphone cover has been shown to result in 18 dB SPL of reduction to physical wind noise.[16] Similarly, a thin piece of foam placed over the microphone can reduce the wind velocity before it reaches the microphone diaphragm.[5] A drawback of a foam windscreen is that, depending on the density of the materials used, it may attenuate

high-frequency sounds above 10 kHz. Such high frequencies may have limited significance for speech understanding. However, broader bandwidth has been associated with improved subjective sound quality for listeners with less than a moderate degree of hearing loss.[17]

Form factor is another mechanical consideration that can affect how much wind turbulence is experienced at the hearing aid microphone. The head, pinna, and tragus can act as wind guards that reduce the amount of direct airflow at the microphone opening. Custom products such as (completely)-in-the-canal hearing aids generally experience less wind noise than BTE hearing aids due to the microphone placement.[3,7] However, BTE hearing aids have been shown to yield lower levels of wind noise across a wider range of head angles (relative to wind direction) than custom hearing aids.[18] Some manufacturers have taken advantage of these position effects by shielding the microphone using anatomic structures, such as hiding the microphone in the small indentation between the crura of the helix and the antihelix of the pinna to minimize turbulence.[5] A recently introduced hearing aid type, called microphone & receiver-in-ear (M&RIE), uses an additional third microphone placed in the user's ear canal (see the article by Jespersen et al in this issue for more information about the M&RIE hearing aid). This approach was reported to yield 14 to 19 dB SPL reduction in the overall wind noise level at wind speeds between 2 and 8 m/s when compared with an omnidirectional microphone placed on top of the pinna.[19] Finally, open-fit hearing aids may reduce the amount of wind noise because the unoccluded opening allows low-frequency noise to escape from the ear canal through the vent.[20]

Signal Processing Approaches

While mechanical approaches attempt to prevent the occurrence of wind noise in the first place, various signal processing approaches have been proposed to reduce the adverse effects of wind noise when it exceeds the capabilities of the mechanical solutions. These signal processing algorithms use knowledge of the signal characteristics of different sounds to selectively attenuate or filter out wind noise and leave desired acoustic signals from the environment intact.

Almost all hearing aids with a directional microphone accomplish the directional effect by using two closely spaced microphones on each hearing aid. When acoustic far-field sources in the hearing aid user's environment reach the two microphones of a dual-microphone hearing aid, each microphone will pick up highly similar versions of the source signal that differ only in the delay introduced by the finite speed of sound and the physical distance between the two microphones. Because the wavelengths of the environmental sounds arriving at both microphones ($\lambda > 3.5$ cm at $f < 10$ kHz) exceed the physical distance of the two microphones (separated by 0.4–1.2 cm),[21] the two sounds are similar in phase, and thus the sounds are highly correlated. Conversely, as discussed earlier, the turbulences created by wind are unique at the two microphones and are therefore uncorrelated. The knowledge regarding how far-field sounds and wind noise correlate at the two microphones is used in signal processing solutions to reduce annoyance from wind noise. Generally, such wind noise reduction algorithms involve two separate steps: detection of the wind noise, followed by a reduction of the wind noise. An example of these steps is reviewed below.

Signal Processing Step 1: Wind Noise Detection

The detection of wind noise is based on measuring the degree of correlation between the front and the back microphones at the low- and mid-frequency (e.g., < 3 kHz) regions. If the front and back microphone signals are correlated, the signals likely originated from an external sound source in the listening environment. If the two signals are uncorrelated, the signals may have been produced at the two microphones independently, such as is the case with wind noise. Because wind noise is typically loud, in addition to being uncorrelated, the detection algorithms also require the signals to exceed some predetermined level to be classified as wind noise.

Signal Processing Step 2: Wind Noise Reduction

Several signal processing strategies have been proposed to reduce the amount of wind noise

after it has been detected. For example, it is known that wind noise energy is most prominent in the low frequencies. Therefore, gain reduction in the low-frequency bands may reduce the intensity of wind noise.[22] One commercial implementation of such an approach monitors the level of environmental sounds and the level of wind noise. It then adjusts the gain so that the levels of the low-frequency bands (where wind noise has been detected) are equal to the long-term average SPL of the environmental sounds.[23] In another implementation,[24] frequency-dependent attenuation is set based on the estimated wind strength/speed, so that when wind levels are low, only the lowest frequency bands are attenuated. As wind levels increase, more attenuation is extended to the higher frequencies. In this implementation, wind noise is estimated 500 times/sec in each band, and attenuation occurs only in bands with negative signal-to-noise ratios (SNRs) where the wind level exceeds speech level. Several manufacturers have claimed such an implementation is effective, but no data are available to substantiate generalized benefits. A limitation of this approach is that any desirable sounds located in the same frequency regions as the wind noise will also be attenuated.

Bilateral fittings provide further flexibility by capturing differences in the amount of wind noise measured at each of the two hearing aids. Information about the presence and severity of wind noise at each side can then be shared between the two hearing aids using wireless technologies.[25] When wind noise is detected to be stronger at one of the two hearing aids, the low-frequency part (< 1.5 kHz) of that hearing aid's microphone signal can be substituted with the low-frequency part of the microphone signal from the ear with less wind noise. The rationale of replacing only the lower frequencies is the knowledge that wind noise energy is typically concentrated in the lower portion of the spectrum at mild-to-moderate wind speeds. By retaining the higher frequencies, the negative effects of distorting interaural cues are lessened and observed only at lower frequencies (see the article by Derleth et al in this issue for more discussion about binaural localization cues). Wireless binaural streaming strategies have been reported to improve speech-in-wind scores by 27% in listeners with a moderate degree of hearing loss at 3.5 to 4 m/sec wind speeds when speech (65 dB SPL) and wind originate from opposite sides.[26] When wind originates from the front (0 degrees) or from the back (180 degrees), there is no significant difference in the wind noise levels at the two ears. An example of such a situation is when the hearing aid user is walking or running.

More traditional modulation-based noise reduction algorithms (i.e., those designed to reduce environmental noise[27,28]), such as Wiener filtering and spectral subtraction methods, may also impact wind noise[29] albeit to a lesser degree than environmental noise (see the article by Andersen et al in this issue for a description of Wiener filters). The primary problem is that modulation-based algorithms assume noise is stationary, whereas wind noise is typically nonstationary with a spectrum that constantly changes with the speed and the angle of the wind. Therefore, if and when the wind characteristics change during speech, these algorithms struggle to obtain valid noise estimates during the speech pauses. A secondary concern arises from spectral-shaping-based methods that reduce all sounds (correlated and uncorrelated) in a given frequency region by the same amount as the gain reduction applied to that frequency region. Although such noise attenuation strategies may reduce the annoyance caused by wind noise, they could also negatively affect the perception of desirable sounds, such as speech, if their gain is reduced along with the undesirable wind noise.

Lastly, wide dynamic range compression (WDRC) has been shown to increase low-level wind noise and reduce high-level wind noise.[29] Adjustment of WDRC parameters can thereby lead to reductions in the amount of wind noise at the hearing aid output.[29] For example, decreasing gain for low-level inputs and lowering the maximum power output or reducing gain for high-level input is one strategy for dealing with wind noise using WDRC parameters. This strategy is most relevant when speech is not present.

Effect of Directional Microphones

Directional microphones introduce an additional consideration to the presence of wind. Directional microphones in hearing aids are

implemented by subtracting the signal at the rear microphone from the signal at the front microphone. The two microphones are typically separated by 0.4 to 1.2 cm.[21] Because the distance between the two microphones is small compared with the wavelengths at low frequencies ($\lambda > 35$ cm at $f < 1$ kHz), signals at the two microphone locations are more likely to be in-phase, and hence more correlated, as the frequency decreases. The similarity of the two microphone signals in the low frequencies means that the subtraction method used to achieve directionality also reduces the level of sounds presented from the front (assumed to be the desired signal) at a rate of −6 dB per octave. This negative side effect is typically counteracted by an equalization filter that increases the directional microphone's low-frequency output by 6 dB per octave.[5] Unfortunately, the subtraction method used to achieve directionality has the opposite effect on uncorrelated sounds, such as wind noise. For uncorrelated sounds, the signal power always increases irrespective of the relative phases of the two signals (i.e., summation and subtraction have the same effect). Thus, the compensatory low-frequency correction implemented in directional microphones further increases the level of uncorrelated noises, including wind noise and internal circuit noise, when compared with an omnidirectional microphone where such compensation is unnecessary.

The adverse effects of wind noise in a directional hearing aid can be addressed using a fully adaptive directional microphone that automatically switches to an omnidirectional microphone mode when wind is detected.[30] An alternative approach is to use an omnidirectional microphone in the lower frequencies and a directional microphone in the higher frequencies.[23] Yet another approach takes advantage of the differences between the correlated far-field sounds and the uncorrelated wind noise by adding, instead of subtracting, the output of the two microphones. This can improve the level difference between environmental sounds and wind noise, the SNR, by 3 dB.[5]

Machine Learning Approach

In recent years, machine learning (ML) has been successfully used to improve computational tasks involving the detection and recognition of temporal patterns in speech, language, and other time series data.[31,32] ML algorithms create models automatically from existing data to make predictions or decisions (see the articles by Andersen et al, Balling et al, and Fabry and Bhowmik in this issue for more information on this topic). Instead of following explicit rules, an ML system learns from experience through training by exposing the algorithm to sample data called "training data." For the wind noise problem, an ML algorithm could be trained to distinguish desirable sounds from wind noise using training data where human listeners have labeled such noise samples. ML-based approaches have shown promise in the processing of nonstationary noise maskers at low SNRs.[33] Recurrent neural networks (RNNs), and their variant, long short-term memory (LSTM), represent one ML approach to analyzing time-series data, such as audio. Indeed, an LSTM-based implementation of wind noise reduction was introduced and assessed for listener preference based on subjective intelligibility, sound quality, and comfort in the presence of 3 m/s wind.[34] The LSTM-based algorithm was preferred for subjective intelligibility and sound quality over no processing, although the magnitude was small (<1 interval on 7-point scale).[34] When compared with a high-pass filtering approach, the LSTM implementation was preferred only for sound quality. Despite modest demonstrated benefits, ML-based approaches may still have utility for reducing wind noise through careful algorithm design and may be worth further exploration.

Adaptive Filtering–Based Algorithm

Adaptive filters are digital filters that attempt to model the relationship between two signals iteratively in real time. Least mean square (LMS) algorithms are a class of adaptive filters that offer a simple and effective means of finding the filter coefficients that minimize the difference between a known desired signal and the actual signal. The LMS algorithm attempts to optimize a desired filter by iteratively updating its coefficient(s) based on the direction of the instantaneous gradient of the squared error signal. When the desired and the

actual signals correlate, the LMS algorithm can find filter coefficients that minimize the squared error. On the other hand, if the two signals are uncorrelated, the algorithm cannot do that. Therefore, LMS filters are known to reduce uncorrelated noise.[35] LMS-based adaptive filters are applicable when some parameters of the desired processing operation are correlative and are not known in advance or are changing over time. In the case of wind noise reduction, where the input signals are time-varying, speech may represent the correlated, desirable signals, and wind noise may represent the uncorrelated, undesirable signals.

An LMS-based wind noise attenuation (WNA) algorithm was designed to reduce the acoustic consequence of wind turbulence while maintaining speech intelligibility and good sound quality for other sounds. Similar to other signal processing approaches that reduce annoyance from wind noise, the WNA algorithm includes both wind noise detection and wind noise reduction stages. The decision on the presence/absence of wind noise is based on the correlation of signals at the two microphones, the frequency spectrum of the input signal, and the energy level of the input signal. The input is determined to be wind noise if (1) the signal at the two microphones is uncorrelated, (2) the signal energy is primarily in the low frequencies, and (3) the signal level exceeds 40 dB SPL. Only when each of these three criteria is met will the algorithm proceed to the LMS-based adaptive filtering stage to reduce the wind noise levels.

While many approaches to wind noise mitigation use the correlation between signals at the two microphones in the wind noise detection stage, the WNA algorithm further utilizes this correlation in the reduction stage. A block diagram of the adaptive filtering used in the WNA reduction stage is shown in Fig. 2. In the presence of wind noise, the two signals y_1 and y_2 that enter the two hearing aid microphones consist of the sum of desired acoustic sounds, denoted by s_1 and s_2, and the unwanted wind noise, denoted by w_1 and w_2. The physical distance between the two microphone ports is much smaller (~16 mm) than the distance from the sound sources in the environment to the hearing aid microphones. Therefore, the SPL does not vary significantly across the small distance between microphones relative to the changing distance from the sound source in the environment. As a result, the environmental signals s_1 and s_2 measured at the two microphones are highly correlated within the bandwidth of interest (<16 kHz), apart from the timing delay introduced by the finite speed of sound. This is in contrast to the wind noise signals w_1 and w_2, which are uncorrelated.

The WNA algorithm includes an adaptive filter *H(z)* which alters one of the microphone inputs (y_2 in Fig. 2) in an attempt to minimize the difference between the input signal y_1 and the filtered input signal y_2. The parameters of filter *H(z)* are updated iteratively so that the mean-squared difference u is continuously minimized. The filter *H(z)* is essentially attempting to predict the signal y_1 using the signal y_2. The prediction of one signal from another is possible only when the two signals are correlated. Therefore, *H(z)* can only predict the part of the signal y_1 that is correlated with y_2, which is

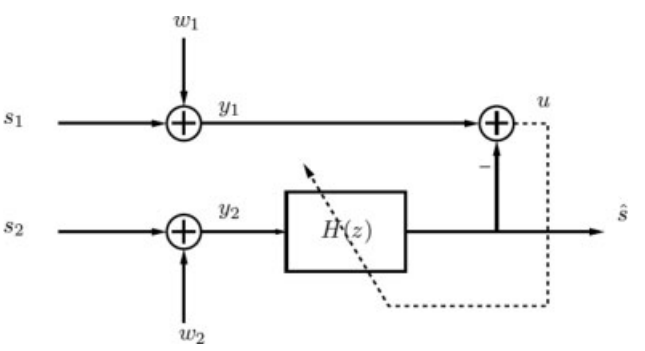

Figure 2 Block diagram displaying the adaptive filtering used to reduce wind noise in the adaptive filtering LMS-based WNA algorithm.

the environmental signal portion s_1. Because the two wind signals w_1 and w_2 are uncorrelated, the adaptive algorithm cannot predict their relationship. Therefore, w_1 and w_2 do not show up in the final output, $\hat{s}$, which is an estimate of the desirable environmental signal. The algorithm is designed to operate on frequency bands up to and including the band at 3.2 kHz. There are no separate circuits dedicated to noise estimation. This means that WNA can operate even in the presence of nonstationary wind noise by constantly adapting to the wind noise, even during speech. The WNA algorithm attenuates only the uncorrelated wind noise and spares the remaining acoustic signals from gain reduction.

Note that signal processing approaches can exist together with mechanical solutions to alleviate wind noise. In fact, the hearing aid in which the WNA algorithm is implemented also includes a microphone cover that shields the microphone from the direct wind. This microphone cover provides up to 18 dB SPL broadband reduction of wind noise.[16]

Efficacy of the Wind Noise Attenuation Algorithm

The efficacy of the WNA algorithm was evaluated by Korhonen et al.[36] Hearing aid output was recorded from the KEMAR (Knowles Electronics Manikin for Acoustic Research) in a wind tunnel with wind originating from 0 to 290 degrees at speeds of 4, 5, 6, 7, and 10 m/s. The recorded stimuli were later presented to a group of 15 experienced hearing aid users via insert earphones. The acoustic effect of the WNA was evaluated by analyzing the output of the hearing aid between the WNA-ON and WNA-OFF conditions. Attenuation was 13 to 18 dB at 1 kHz when wind originated from directly in front of KEMAR (0 degrees) at wind speeds ranging from 4 to 7 m/s (Fig. 3). The amount of attenuation provided by the WNA algorithm was the greatest (e.g., 19 dB at 2,200 Hz) when wind speed was 10 m/s. Overall levels of wind noise were greater when wind was presented from the front (0 degrees) than from the side (290 degrees). Such frontal (0 degrees) wind direction is typical for situations where the user is moving forward such as in jogging and cycling. In general, the WNA algorithm reduced the wind noise in all conditions except at 4 and 5 m/s wind speeds when wind originated from 290 degrees.

The attenuation provided by the WNA algorithm reduced the subjective impressions of wind noise annoyance.[36,37] In one of the studies,[37] the subjective rating of annoyance was measured using a rating scale from 1 to 7, with a smaller number indicating less annoyance. Median annoyance ratings were consistently lower (i.e., less annoyance) for all wind speed and angle conditions, except when the wind originated from 70 degrees at 4 or 5 m/s (no preference; Fig. 4). When wind was presented from this side direction (70 degrees) at 6 and 7 m/s, the WNA algorithm reduced annoyance ratings. Wind from the side was less annoying

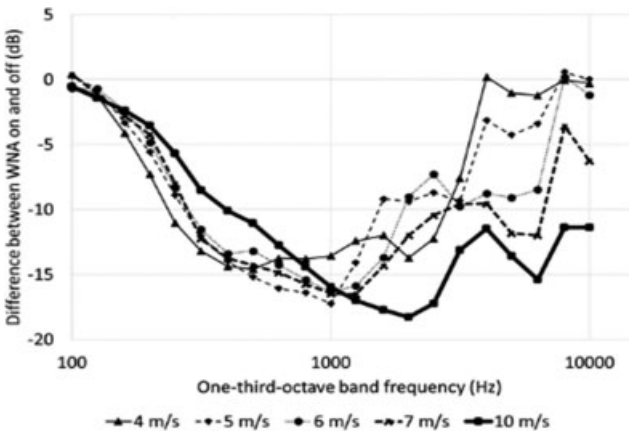

Figure 3 The wind noise attenuation provided by the adaptive LMS-based WNA algorithm when wind originated from 0 degrees at speeds ranging from 4 to 10 m/sec.

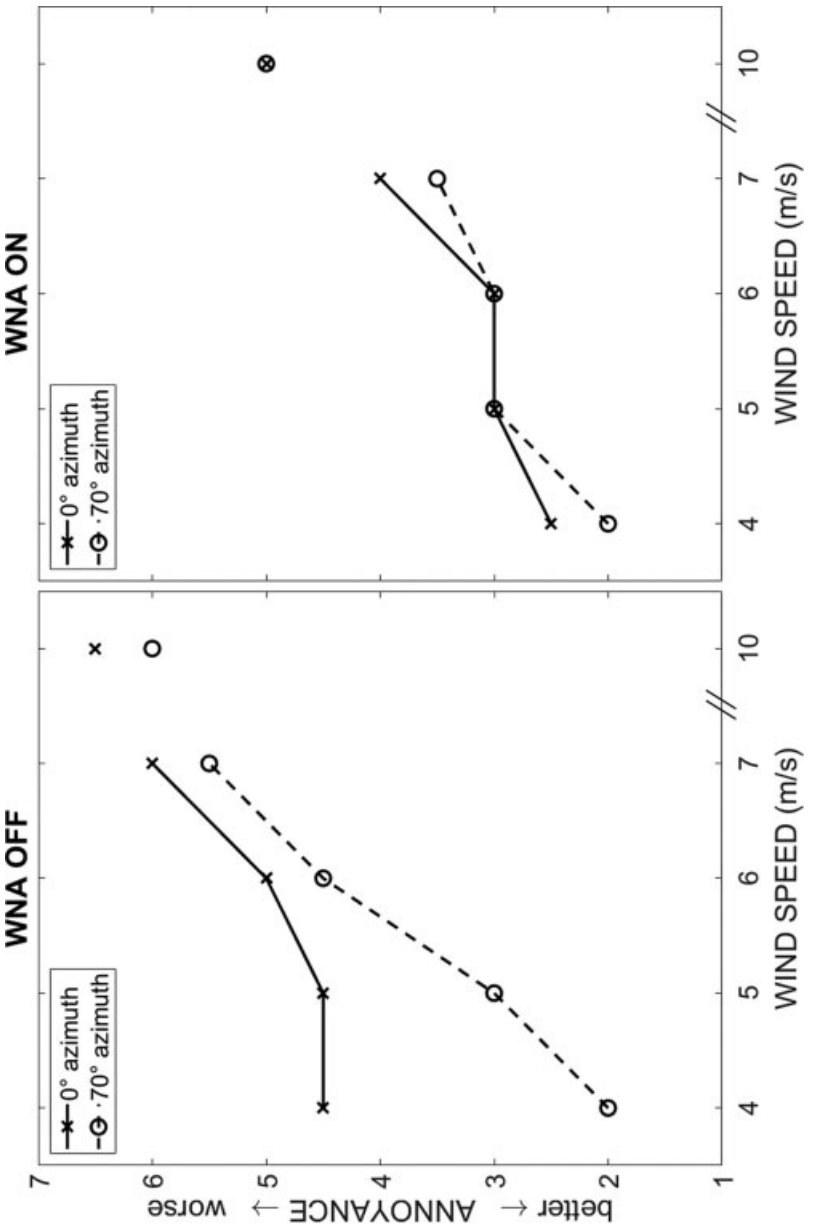

Figure 4 Median listener rating of annoyance (1–7) when the wind originated from 0 degrees (left panel) and 180 degrees (right panel) at speeds 4, 5, 6, 7, and 10 m/sec.

overall than wind from the front when not using the feature. However, when using the feature, the annoyance ratings were consistently favorable, with no difference between the two wind angles. When wind originates from the front (0 degrees) or the back (180 degrees), the wind-noise levels are similar at the ears. Therefore, wind noise reduction algorithms based on bilateral level differences would likely not be beneficial in such a situation.

As previously noted, wind noise is often loud and can mask speech completely. This effect was quantified through listeners' objective phoneme identification abilities as measured using the Widex Office of Research in Clinical Amplification Nonsense Syllable Test.[38] In this test, nonsense speech stimuli were presented at 60, 65, 70, and 75 dB SPL from 270 degrees with the wind originating from 0 degrees at a speed of 5 m/s. Without WNA, phoneme identification was close to 0% when the speech level was 65 dB SPL or less. However, with the WNA algorithm activated in the same wind conditions, phoneme identification was 49.6% when the speech level was 65 dB SPL. The estimated SNR benefit for phoneme identification at the 50% performance level was 8.4 dB (Fig. 5).

Theoretically, because wind noise results from turbulence at the hearing aid microphone, it does not have a direction per se even though the wind flow that causes the turbulence has a direction. Therefore, while the speech in noise benefit of the WNA algorithm was demonstrated when wind originated from the side of the listener, one would expect to see similar improvement at other angles, even in conditions where speech originates from the same direction as the airflow that caused the wind noise.

CONCLUSIONS

Wind can limit the situations where a hearing aid performs satisfactorily, which may negatively impact users' participation in their everyday activities. Some hearing aid users may find listening in wind so annoying that it leads them to turn off or mute their hearing aids. Some users may even opt to not use their hearing aids at all in situations where wind may be anticipated. If this happens, the user's speech intelligibility could be compromised considerably.

Several approaches to mitigate the annoyance caused by wind noise have been reported. Mechanical approaches attempt to prevent wind flow from entering the hearing aid microphone(s). On the other hand, signal processing approaches attempt to reduce the level of wind noise already picked up by the microphone. While strategies based on gain reduction may alleviate the annoyance caused by wind noise, they could also negatively affect the perception of desirable sounds, such as speech, if their gain is reduced along with the undesirable wind

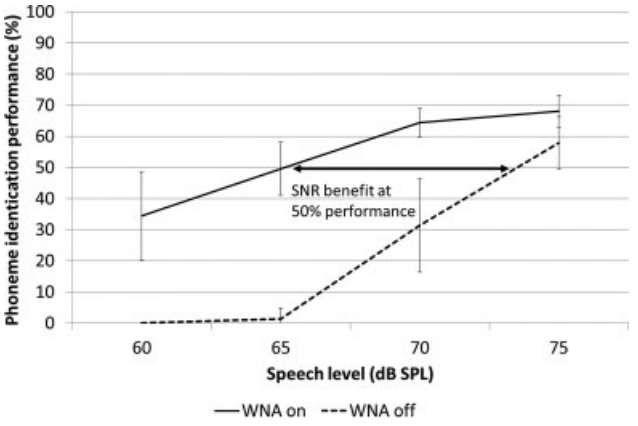

Figure 5 Average listener phoneme identification performance for WNA-ON and WNA-OFF conditions when speech was presented from 270 degrees at 60, 65, 70, and 75 dB SPL and wind originated from 0 degrees at 5 m/s speed. Error bars represent ± 1 standard deviation. The arrow highlighting the horizontal distance between the performance functions represents the benefit at 50% speech performance level.

noise. Adaptive filtering using an LMS-based approach is a successful signal processing strategy that overcomes this limitation and has been demonstrated to be an efficient way of combating wind noise at many wind speeds and wind directions. Specifically, the LMS filtering approach to wind noise management can reduce the amount of uncorrelated wind noise at the hearing aid output without compromising the integrity of the correlated, desirable speech sounds. Such a feature has been demonstrated to improve users' subjective preference and objective speech-in-wind performance. Considering the popularity of BTE and receiver-in-the-canal style hearing aids,[39] which are most susceptible to wind noise,[7] the use of an effective wind noise management strategy is vital to successful hearing aid adoption and rehabilitation. By expanding the number of listening environments in which the user can communicate, more consistent use of hearing aids can be promoted.

CONFLICT OF INTEREST

The author is an employee of WS Audiology.

REFERENCES

1. Kochkin S. MarkeTrak VIII: consumer satisfaction with hearing aids is slowly increasing. Hear J 2010; 63(01):19–27
2. Bisgaard N, Ruf S. Findings from EuroTrak surveys from 2009 to 2015: hearing loss prevalence, hearing aid adoption, and benefits of hearing aid use. Am J Audiol 2017;26(3S):451–461
3. Zakis JA. Wind noise at microphones within and across hearing aids at wind speeds below and above microphone saturation. J Acoust Soc Am 2011;129 (06):3897–3907
4. Strasberg M. Dimensional analysis of windscreen in noise. J Acoust Soc Am 1988;83:544–548
5. Kates J. Digital Hearing Aids. Plural Publishing; 2008
6. Morgan S, Raspet R. Investigation of the mechanisms of low-frequency wind noise generation outdoors. J Acoust Soc Am 1992;92(02): 1180–1183
7. Dillon H, Roe I, Katsch R. Wind Noise in Hearing Aids: Mechanisms and Measurements. National Acoustics Laboratories; 1999
8. Chung K. Strategies to reduce wind noise interference on hearing aids. Hear J 2020;73(07):10–13
9. Wuttke J. Microphones and the wind. J Audio Eng Soc 1991;40:809–817
10. Raspet R, Webster J, Dillion K. Framework for wind noise studies. J Acoust Soc Am 2006;119(02): 834–843
11. Brown D, Mongeau L. The Design, Construction, and Validation of a Small, Low- Speed, Quiet Wind Tunnel with Application to Noise from the Flow over a Cavity. Purdue University; 1995: HL95–HL99
12. Beard J, Nepomuceno H. Wind Noise Levels for an ITE Hearing Aid. Knowles Electronics; 2001
13. Chung K, Mongeau L, McKibben N. Wind noise in hearing aids with directional and omnidirectional microphones: polar characteristics of behind-the-ear hearing aids. J Acoust Soc Am 2009;125 (04):2243–2259
14. Corcos G. Resolution of pressure in turbulence. J Acoust Soc Am 1963;35:192–199
15. Corcos G. The structure of the turbulence field in boundary-layer flows. J Fluid Mech 1964; 18:353–378
16. Widex SUPER™ Power to Hear. Widex2012. Accessed March 5, 2021 at: https://fi.widex.pro/-/media/downloads/pdf/hearing-aids/super/brochures/en/widex-super-vsd-introduction-brochure_9-502-2928-001-01.pdf
17. Ricketts TA, Dittberner AB, Johnson EE. High-frequency amplification and sound quality in listeners with normal through moderate hearing loss. J Speech Lang Hear Res 2008;51(01):160–172
18. Chung K, McKibben N, Mongeau L. Wind noise in hearing aids with directional and omnidirectional microphones: polar characteristics of custom-made hearing aids. J Acoust Soc Am 2010;127(04): 2529–2542
19. Groth J. An Innovative RIE with Microphone in the Ear Lets Users "Hear with Their Own Ears." GN Hearing A/S; 2020:1–8
20. Chung K. Effects of venting on wind noise levels measured at the eardrum. Ear Hear 2013;34(04): 470–481
21. Ricketts TA. Directional hearing AIDS. Trends Amplif 2001;5(04):139–176
22. Bentler R, Chiou L-K. Digital noise reduction: an overview. Trends Amplif 2006;10(02):67–82
23. Stender T, Hielscher M. Windguard: Bringing Listening Comfort to Windy Conditions. ReSound; 2011
24. Weille J, Andersen R. Wind Noise Management. Oticon; 2016
25. Latzel M, Appleton J. Evaluation of a binaural speech in wind feature, Part 1: verification in the laboratory. Hear Rev 2013;8:32–34
26. Latzel M, Appleton J. Evaluation of a binaural speech in wind feature, Part 2: validation and real-life benefit. Hear Rev 2013;9:32–35

27. Kuk F, Ludvigsen C, Paludan-Muller C. Improving hearing aid performance in noise: challenges and strategies. Hear J 2002;55(04):34–46
28. Dillon H. Hearing Aids. 2nd ed.Boomerang Press; 2012
29. Chung K. Wind noise in hearing aids: I. Effect of wide dynamic range compression and modulation-based noise reduction. Int J Audiol 2012;51(01):16–28
30. Kuk F, Keenan D, Lau C-C, Ludvigsen C. Performance of a fully adaptive directional microphone to signals presented from various azimuths. J Am Acad Audiol 2005;16(06):333–347
31. Graves A, Mohamed H, Hinton G. Speech recognition with deep recurrent neural networks. Paper presented at IEEE Conference on Acoustics, Speech, and Signal Processing; May 26–31, 2013; Vancouver, Canada
32. Lipton Z, Berkowitz J, Elkan C. A critical review of recurrent neural networks for sequence learning. arXiv 2015;1506.00019v4
33. Chen J, Wang Y, Yoho SE, Wang D, Healy EW. Large-scale training to increase speech intelligibility for hearing-impaired listeners in novel noises. J Acoust Soc Am 2016;139(05):2604–2612
34. Keshavarzi M, Goehring T, Zakis J, Turner RE, Moore BCJ. Use of a deep recurrent neural network to reduce wind noise: effects on judged speech intelligibility and sound quality. Trends Hear 2018;22:2331216518770964
35. Haykin S. Adaptive Filter Theory. Pearson; 2014
36. Korhonen P, Kuk F, Seper E, Mørkebjerg M, Roikjer M. Evaluation of a wind noise attenuation algorithm on subjective annoyance and speech-in-wind performance. J Am Acad Audiol 2017;28(01): 046–057
37. Lee L. Efficiency of a wind noise attenuation algorithm. Hear Rev 2016;23(06):22–25
38. Kuk F, Lau C-C, Korhonen P, Crose B, Peeters H, Keenan D. Development of the ORCA nonsense syllable test. Ear Hear 2010;31(06):779–795
39. Picou EM. MarkeTrak 10 (MT10) survey results demonstrate high satisfaction with and benefits from hearing aids. Semin Hear 2020;41(01): 21–36